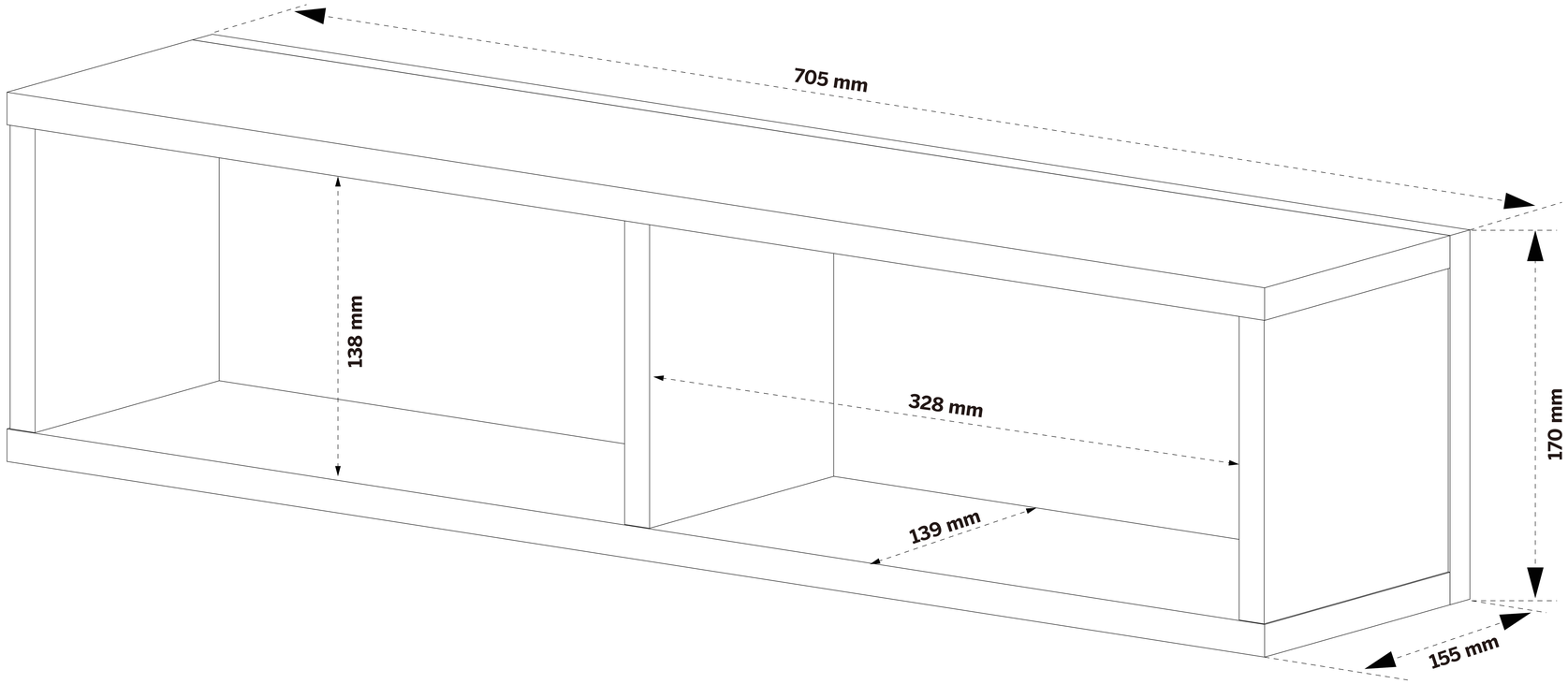

CD BOX 90

GLORIOUS